3SE2, 3SE3 Position Switches with Separate Actuator

Molded-plastic enclosures, 52 mm

Configuration

Operation and operating travel of actuators

Operating mechanism	Operation by a separate actuator	Contact blocks	Nominal travel	Minimum force required in operating direction on retraction
	v_{max} Max. operating speed → Direction of operation Radius actuation: for all directions of approach	Terminal designation according to EN 50013	Contact closed Contact open Actuator in actuator head; NC is closed	
Separate actuators		*Slow-action contacts*	Lateral actuation	
Lateral and front-end actuation	**3SE2 243–.XX.., 3SE2 257–.XX..**	**1 NO + 2 NC**		30 N or 5 N
	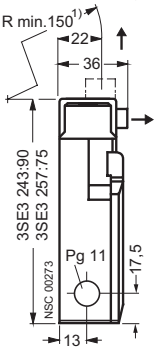	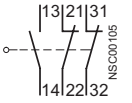	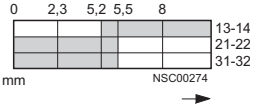	
		Ident. No. **12**		
		1 NC	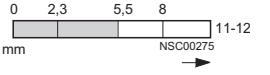	
		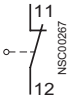		
		Ident. No. **01**		

[1)] Radius actuator: R_{min} > 38 mm.

Dimensional drawings

3SE2 243, lateral and front-end actuation, with 3SX3 218 standard actuator

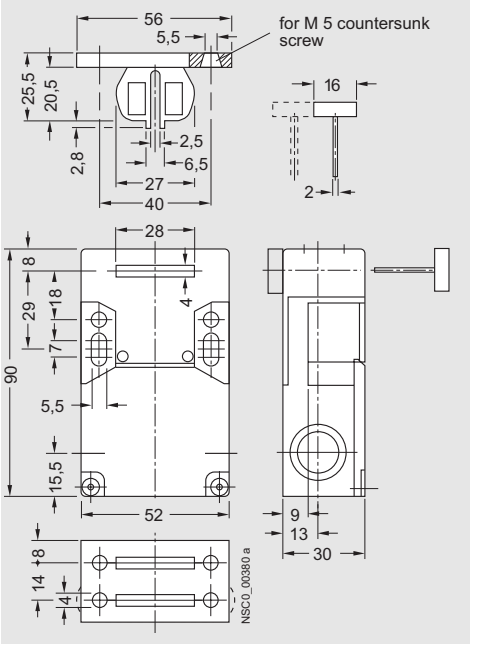

3SE2 257, lateral and front-end actuation

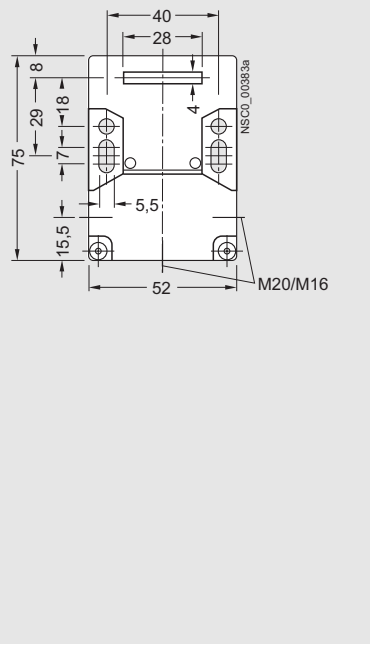

3SX3 228 universal radius actuator

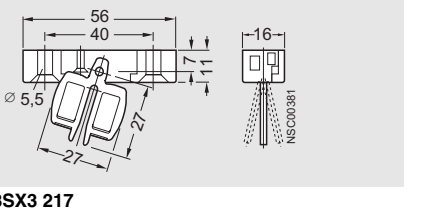
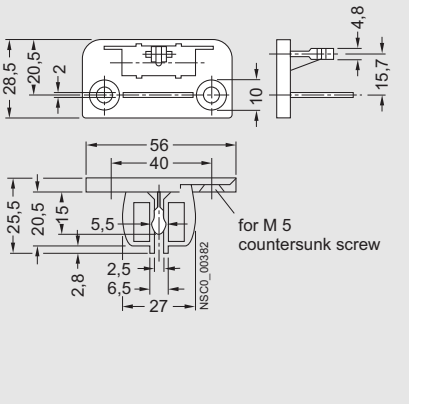
3SX3 217 actuator with ball locating